Experiment 5 **Digital Electronics** **Monsoon 2018**

Combinational Design using Multiplexers and Gates

In this experiment, we will study the design and implementation of two combinational circuits with incompletely specified functions, using Multiplexers and Gates.

You will use the following ICs for this experiment:

74LS153 Dual 4-input Multiplexer, belonging to the TTL family, and

CD4001 Quad 2-input NOR gate, belonging to the CMOS family.

The pin connections of the **74LS153** IC are given in **Fig. 7.1** below. For the Dual 4-input Multiplexer chip, ***X0***, ***X1***, ***X2***, ***X3*** denote the four data inputs and ***Q*** denotes the data output for **each** multiplexer, the pins corresponding to the two multiplexers in the same chip being distinguished by a prefix (***1*** or ***2***), as indicated in **Fig. 7.1**. ***S1 S0*** are the common Select inputs for the two multiplexers, and ***1EN'*** and ***2EN'*** are the (negative-logic) output enable inputs for the two multiplexers respectively. The outputs ***1Q*** and ***2Q*** of the two multiplexers are given by the expressions

1Q = ***1X0*** / ***1X1*** / ***1X2*** / ***1X3*** accordingly as ***S1 S0*** = ***00 / 01 / 10 / 11***, provided ***1EN'*** = ***0***; and

2Q = ***2X0*** / ***2X1*** / ***2X2*** / ***2X3*** accordingly as ***S1 S0*** = ***00 / 01 / 10 / 11***, provided ***2EN'*** = ***0***.

1Q = 0 if ***1EN'*** = ***1*** and ***2Q = 0*** if ***2EN'*** = ***1***, irrespective of the Select and Data inputs.

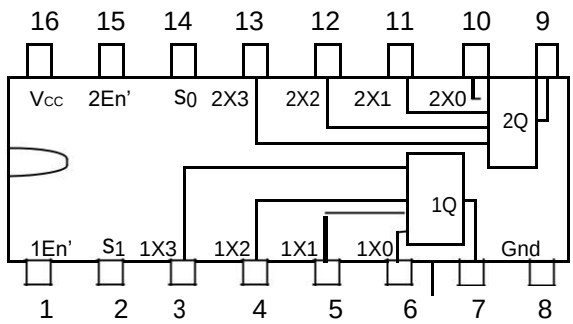

Fig. 7.1 Pin Connections of 74LS153 Dual 4-input

Multiplexer A. <u>Decoder for Encrypted Decimal Digits</u>

Consider a 4-bit code ***P Q R S*** to represent decimal digits (value = ***N***) as follows.

For $4 \geq N \geq 0$, ***P Q R S*** = 13 – N (in decimal), e.g. if ***N*** = 2, ***P Q R S*** = 1011 and
for $9 \geq N \geq 5$, ***P Q R S*** = N – 3 (in decimal), e.g. if ***N*** = 6, ***P Q R S*** = 0011.

A ***Decoder*** circuit has to be designed to ***decode*** the ***P Q R S*** code for decimal digits and generate their normal BCD (Binary-Coded-Decimal) code. The schematic diagram of the circuit, using four 4-input multiplexers, is given in **Fig. 7.2**. ***P*** and ***Q*** bits will be applied as the common Select bits S_1 S_0 of the multiplexers, and the Data inputs of the multiplexers generated out of the remaining two bits ***R*** and ***S*** using NOR gates. The decoded output bits ***D C B A*** are given by the four multiplexer outputs.

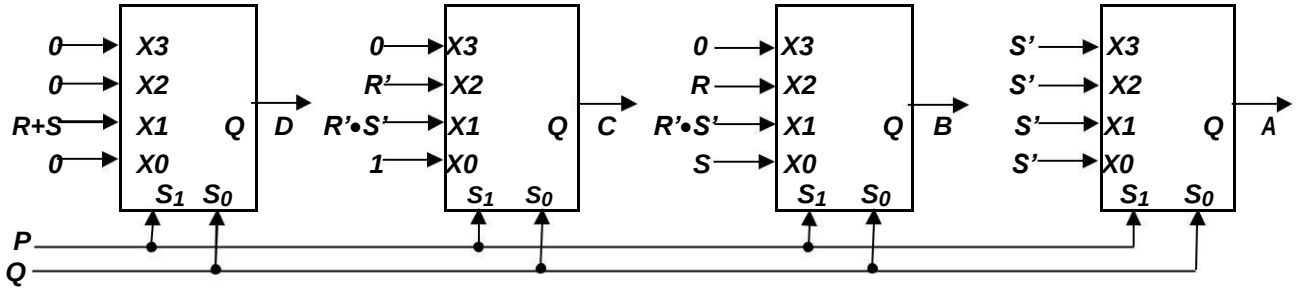

Fig. 7.2 Schematic Diagram for the Decoder for Encrypted Decimal Digit

1. <u>Before coming for the practical class</u>,

   (i) Draw the actual circuit diagrams corresponding to **Fig. 7.2** in your note-book, including the NOR gates required for generating the Data inputs of the multiplexers.

   (ii) Draw the K-maps for the two problems in your note-book and verify theoretically that the circuits given in **Fig. 7.2** do generate the required outputs as required for the given problems, taking care of the "*don't care*" combinations for the two problems appropriately.

2. Test one of the four 4-input multiplexers out of the two 74LS153 chips by proceeding as follows:

   (i) Connect the V_{CC}, ***Gnd*** and ***EN'*** pins of the chip to V_{DC}, ***Gnd*** and ***Gnd*** respectively.

   (ii) Apply the 4 possible values of the 2-bit Select input ***S1 S0*** one by one in the binary number sequence and verify the working the multiplexer as defined in the previous page.

3. Use the four gates in the NOR chip to generate the four different functions of ***R*** and ***S*** needed as Data inputs in **Fig. 7.2** and assemble the complete circuit given in **Fig. 7.2** by connecting these NOR gate outputs to the multiplexers in the two 74LS153 chips. Connect the inputs ***P*** and ***Q*** to the common Select inputs ***S1 S0*** of both the multiplexer chips, and keep all four ***En'*** inputs connected to ***Gnd***.

4. Apply the ***P Q R S*** inputs through Input Switches and tabulate the observed output ***D C B A*** for all combinations of ***P Q R S***. Verify that the tabulated results conform to the specified requirements of the Decoder.

B. Divider for 2-bit Numbers

This circuit is required to perform the division of a 2-bit number $N_1\ N_0$ by another 2-bit number $D_1\ D_0$ to generate a 2-bit Quotient $Q_1\ Q_0$ and a 2-bit Remainder $R_1\ R_0$. This problem was part of **Problem Set 4**, and you should already have constructed the K-maps for the problem.

The schematic diagram of the circuit**,** using four 4-input multiplexers**,** is given in **Fig. 7.3**. The Dividend bits N_1 and N_0 are applied as the common Select bits $S_1\ S_0$ of the multiplexers, and the Data Inputs of the four multiplexers are generated out of the Divisor bits D_1 and D_0 as indicated in **Fig. 7.3.** The 2-bit Quotient $Q_1\ Q_0$ and the 2-bit Remainder $R_1\ R_0$ are given by the four multiplexer outputs.

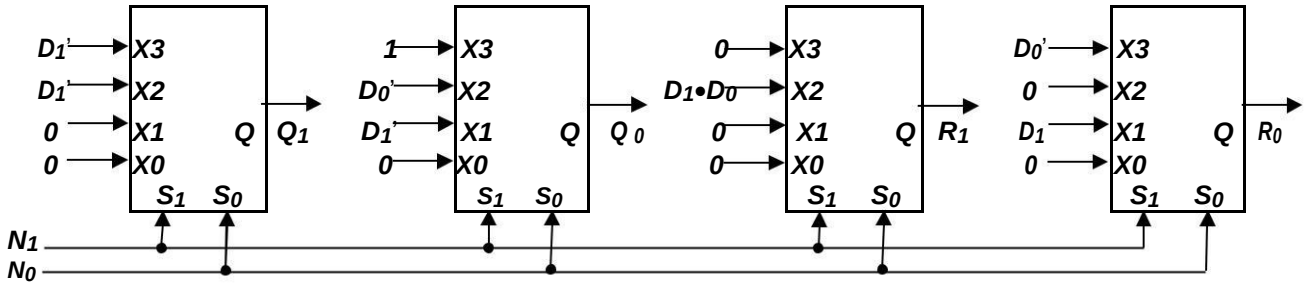

Fig. 7.3 Schematic Diagram for the 2-bit Divider

1. <u>Before coming for the practical class</u>, repeat step **A.1** with reference to **Fig. 7.3**.

2. Use three gates in the NOR chip to generate the three different functions of D_1 and D_0 needed as Data inputs in **Fig. 7.3** and assemble the complete circuit given in **Fig. 7.3** by connecting these NOR gate outputs to the multiplexers in the two 74LS153 chips. Connect the inputs N_1 and N_0 to the common Select inputs ***S1 S0*** of both the multiplexer chips, and keep all four ***En'*** inputs connected to ***Gnd***.

3. Apply the $N_1\ N_0\ D_1\ D_0$ inputs through Input Switches and tabulate the observed output $Q_1\ Q_0\ R_1\ R_0$ for all permissible combinations of $N_1\ N_0\ D_1\ D_0$. Verify that the tabulated results conform to the specified requirements of the Divider.